CyberPower®

SMART APP ONLINE UPS SYSTEM

INSTALLATION AND OPERATION MANUAL

MBP63AHVHW82U

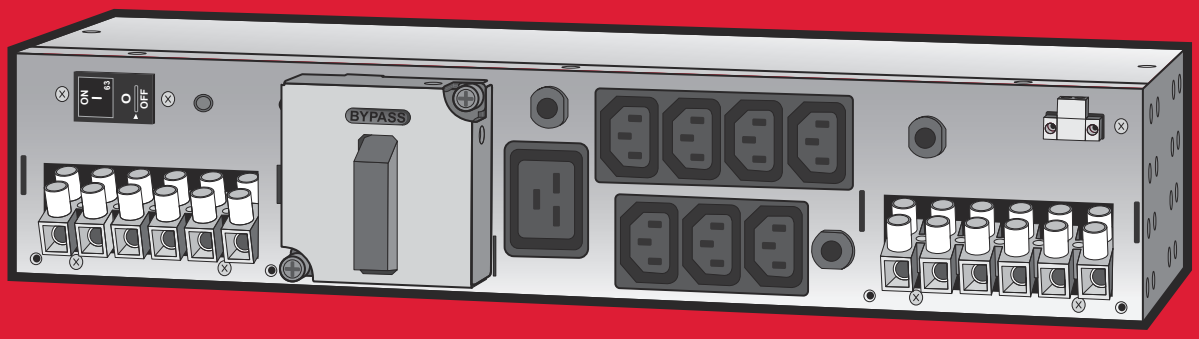

SAVE THESE INSTRUCTIONS
Please read this manual and follow the instructions for installation and operation.

©2020 Cyber Power Systems, Inc. All rights reserved. K01-0000824-00

SAFETY INSTRUCTIONS

SAVE THESE INSTRUCTIONS

This manual contains important instructions. Please read and follow all instructions carefully during installation and operation of the unit. Read this manual thoroughly before attempting to unpack, install, or operate the Maintenance Bypass PDU (MBP).

The SmartApp Online MBP63AHVHW82U models that are covered in this manual are intended for installation in an environment within 32°F to 104°F (0°C to 40°C), free of conductive contaminants.

SPECIAL SYMBOLS

Warning: High voltage – Risk of Electric Shock.

Caution - Important Instructions: Must always be followed.

Information, advice, help.

See applicable user manual.

©2020 Cyber Power Systems, Inc. All rights reserved.

SAFETY INSTRUCTIONS CONT.

PERSONAL SAFETY

CAUTION

CAUTION - To reduce the risk of fire, connect only to a circuit provided with 40 amperes (5,000 VA) /50 amperes (6,000 VA)/60 amperes (8,000 VA)/75 amperes (10,000 VA) maximum branch circuit overcurrent protection in accordance with the National Electric Code, ANSI/NFPA 70 and the Canadian Electrical Code, Part I, C22.1.

CAUTION! The MBP must be connected to a grounded AC power outlet with a fuse or circuit breaker protection. DO NOT plug the MBP into an outlet that is not grounded.

CAUTION! The MBP should be placed near the connected equipment and easily accessible.

CAUTION! The AC outlet, where the MBP is connected, should be close to the unit and easily accessible.

Do not work alone under hazardous conditions.

Input circuit breaker must be “OFF” during the building installation.

RISK OF ELECTRIC SHOCK

WARNING! To prevent the risk of fire or electric shock, install in a temperature and humidity controlled indoor area, free of conductive contaminants. (Please see specifications for acceptable temperature and humidity range).

WARNING! (No User Serviceable Parts): Risk of electric shock, do not remove the cover. There are no user serviceable parts inside. Seek service from qualified service personnel.

To prevent the risk of fire or electric shock, only use the supplied hardware to attach the mounting brackets.

Remove watches, rings or other metal objects. Use tools with insulated handles.

To prevent the risk of fire or electric shock, install in a temperature and humidity controlled indoor area, free of conductive contaminants. (Please see specifications for acceptable temperature and humidity range).

To avoid electric shock, turn off and unplug the unit before installing the input/output power cord with a ground wire. Connect the ground wire prior to connecting the line wires!

Connect the Protection Earth (PE) safety conductor before any other cables are connected.

©2020 Cyber Power Systems, Inc. All rights reserved.

SAFETY INSTRUCTIONS CONT.

PRODUCT SAFETY

RISK OF ELECTRIC SHOCK

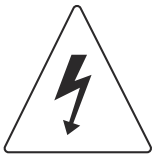

Maintenance Bypass PDU (MBP) covered in this document are permanently-connected equipment and only qualified maintenance personnel may carry out installations.

Wiring must be done by qualified personnel.

DO NOT USE FOR MEDICAL OR LIFE SUPPORT EQUIPMENT! Under no circumstances should this unit be used for medical applications involving life support equipment and/ or patient care.

DO NOT USE WITH OR NEAR AQUARIUMS! To reduce the risk of fire, do not use with or near aquariums. Condensation from the aquarium can come in contact with metal electrical contacts and cause equipment to short out.

The unit has a dangerous amount of voltage.

DO NOT INSTALL THE MBP WHERE IT WOULD BE EXPOSED TO DIRECT SUNLIGHT OR NEAR A STRONG HEAT SOURCE!

DO NOT CONNECT DOMESTIC APPLIANCES SUCH AS HAIR DRYERS TO MBP OUTPUT SOCKETS!

A readily accessible disconnect device shall be incorporated in the building installation wiring for AC Input.

Wiring Information: “Use No. 6 AWG, minimum 90°C copper wire and 18 lb-in Torque force when connecting to AC wiring terminal”.

©2020 Cyber Power Systems, Inc. All rights reserved.

TABLE OF CONTENTS

SAFETY INSTRUCTIONS ..... **II**
Special Symbols II
Personal Safety III
Product Safety IV
INTRODUCTION **1**
Maintenance Bypass PDU (MBP) 1
Whats In The Box 3
HARDWARE INSTALLATION **4**
Front Panel Description 4
Brackets Installation 5
MBP Installation 5
ELECTRICAL INSTALLATION **7**
Hardwiring The Input/Output Terminals 7
Operations With MBP Detection Cable Installed 10
Operations To Retain EPO & ROO Function 15
TECHNICAL SPECIFICATIONS. **21**

©2020 Cyber Power Systems, Inc. All rights reserved.

INTRODUCTION

The CyberPower Maintenance Bypass PDU (MBP) allows the seamless transfer of an electrical load from UPS power to utility power for uninterrupted operation of connected equipment when performing maintenance, replacing batteries, or installing a new UPS.

The key features include:

- Power Distribution
  Delivers AC power to servers, equipment, and connected devices via a power distribution unit.

- Maintenance Bypass
  Qualified personnel can use the bypass feature to disconnect the PDU from the UPS without disrupting power to connected equipment. This feature allows connected equipment to operate seamlessly during maintenance periods, battery replacement, or UPS installation.

- Manual Bypass Switch
  When the Manual Bypass Switch is turned to Normal, connected equipment is supplied by UPS output. When the Manual Bypass Switch is turned to Bypass, connected equipment is supplied by utility power.

- Durable Metal Housing
  Protects internal components and resists damage from impact or abrasions within challenging industrial environments. Also extends the life of the product.

©2020 Cyber Power Systems, Inc. All rights reserved.

INTRODUCTION CONT.

[NOTE] MBP63AHVHW82U Only with compatible CyberPower UPS.

[NOTE] If the MBP Detection Cable is not used, the Firmware is not required to be updated.

[NOTE] If MBP Detection Cable is installed, the UPS EPO and ROO functions will be disabled.

[NOTE] If MBP Detection Cable is not installed, the UPS will not automatically transfer to bypass mode.

[NOTE] TO AVOID DAMAGE! Read the MBP User Manual before installation and operation for correct operating procedures and to avoid lost power load or UPS damage.

[NOTE] If the UPS is equipped with outlets, those outlets can no longer be used, loads can only be connected to the MBP outlets or the MBP Output terminal blocks.

UPS should be turned off when UPS is doing maintenance, if load connect to UPS outlet, the load will be lost.

Before turn off UPS, MBP need to set to bypass and keep provide power from utility.

©2020 Cyber Power Systems, Inc. All rights reserved.

INTRODUCTION CONT.

WHATS IN THE BOX

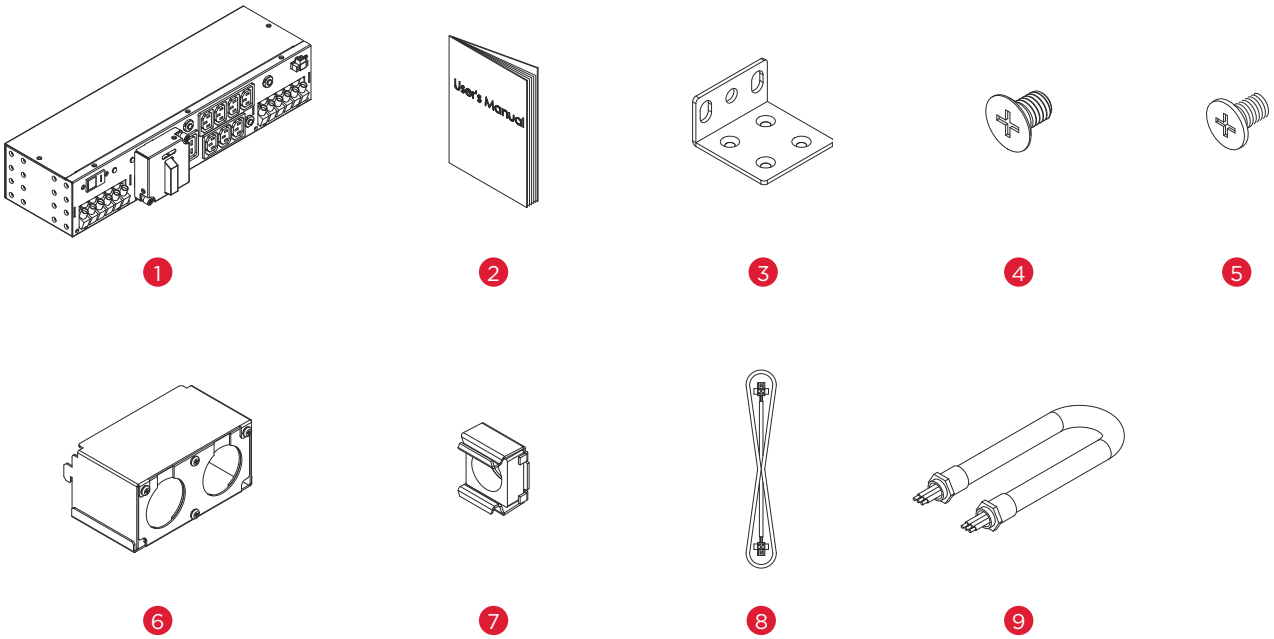

ITEM	CONTENT	QTY
1	MBP63AHVHW82U (Maintenance Bypass PDU)	1
2	User's manual	1
3	Rackmount brackets	2
4	Flat head screws: M4X6L (4)	4
5	Pan head screws: M5X8L (4)	4

ITEM	CONTENT	QTY
6	Input/output terminal block cover	2
7	Cage nut	4
8	MBP detection cable 3.3ft	1
9	Conduits with internal wires for MBP63AHVHW82U to UPS input / output 3ft	2

©2020 Cyber Power Systems, Inc. All rights reserved.

HARDWARE INSTALLATION

MBP FRONT PANEL DESCRIPTION

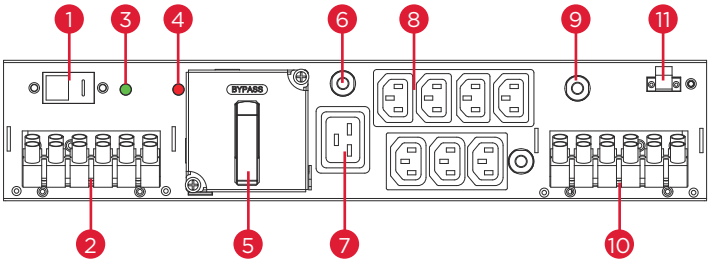

1. UPS INPUT SWITCH
2. Input/Output terminal blocks connect to UPS
3. “Bypass” Red light LED indicator (Bypass source ready)
4. “Normal” Green light LED indicator (UPS source ready OK to switch)
5. MAINTENANCE BYPASS SWITCH
6. 16A circuit breaker for IEC C19 outlet
7. EC C19 (1) outlet
8. IEC C13 (7) outlet
9. 10A circuit breaker for IEC C13 outlet
10. Input terminal blocks connect to utility and Output terminal blocks connect to equipment load
11. MBP detection port

©2020 Cyber Power Systems, Inc. All rights reserved.

HARDWARE INSTALLATION CONT.

The MBP can be mounted in a rackmount or vertical tower orientation. Please follow the instructions below for the respective mounting methods.

1. Brackets installation

Attach the two brackets to the MBP using the provided screws M4X6L*4pcs.

2. MBP Installation

Secure the MBP to rack, CyberPower rack-mounted UPS or a wall with the provided screws M5X8L*2pcs.

MBP mounted horizontally in a rackmount

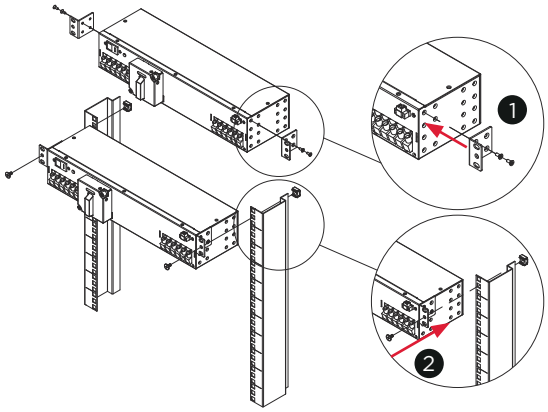

MBP mounted vertically in a rackmount

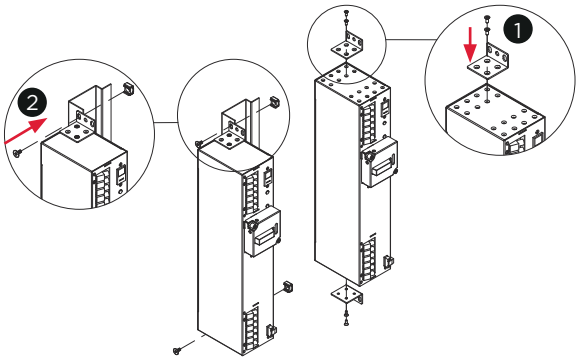

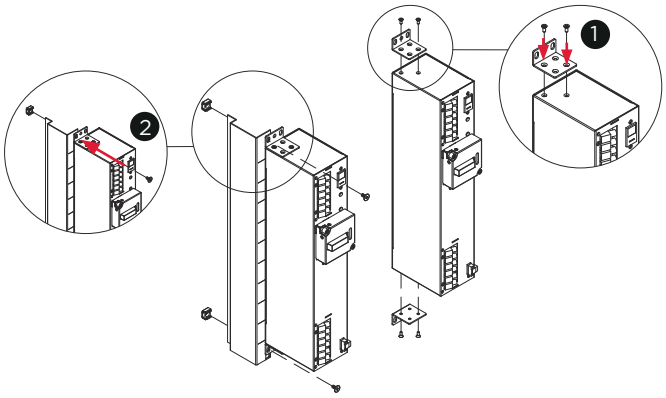

©2020 Cyber Power Systems, Inc. All rights reserved.

HARDWARE INSTALLATION CONT.

1. Brackets installation

Attach the two brackets to the MBP using the provided screws M4X6L*4pcs.

2. MBP Installation

Secure the MBP to rack, CyberPower rack-mounted UPS or a wall with the provided screws M5X8L*2pcs.

MBP mounted horizontally with a CyberPower UPS

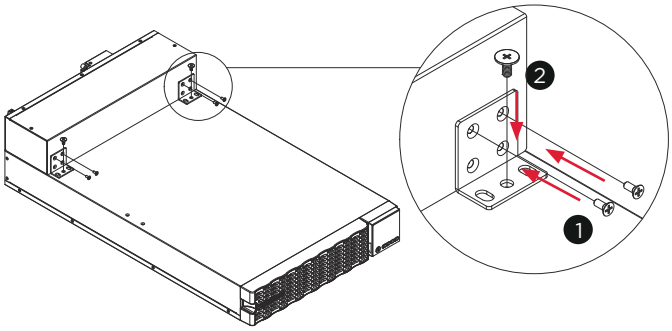

MBP mounted with a CyberPower UPS in tower mode

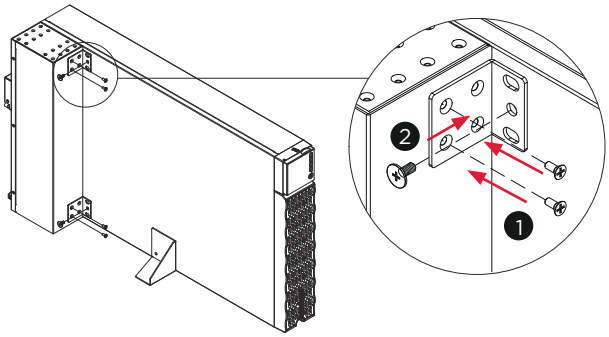

Wall-mounted

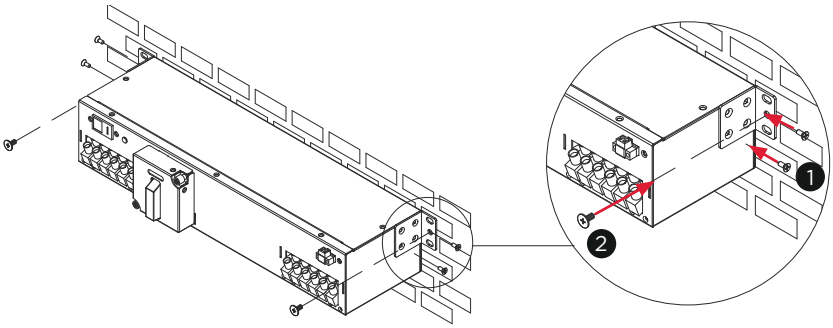

Caution: Important Instructions

To prevent the risk of fire or electric shock, only use the supplied hardware to attach the mounting brackets.

©2020 Cyber Power Systems, Inc. All rights reserved.

ELECTRICAL INSTALLATION

HARDWIRING THE INPUT/OUTPUT TERMINALS

Important! Set the UPS INPUT switch of the MBP to the “O” off position before hardwire connecting.

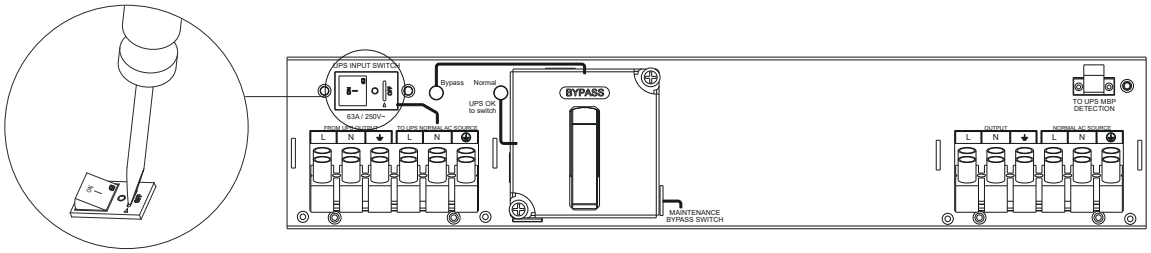

CONNECT MBP TO UTILITY AND LOAD CONFIGURATION

1. Fix the terminal block bottom cover and tighten the two screws to fix the terminal block bottom cover on the MBP.
2. Insert the output cable through the appropriate cable gland and connect three wires L, N and Ground to the “OUTPUT” MBP terminal block. (For connection to Load).
3. Insert the input cable through the appropriate cable gland and connect the three wires L, N and Ground to the “NORMAL AC SOURCE” MBP terminal blocks. (For connection to Utility).
4. Put the terminal block Top cover and tighten the two screws to cover terminal.
5. Tighten the cable glands.

❶

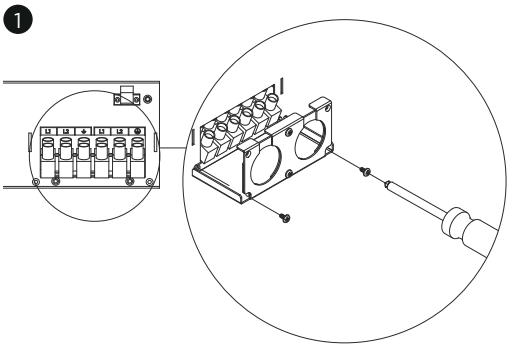

❷ ❸

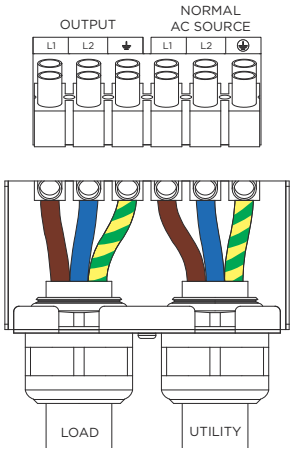

❹

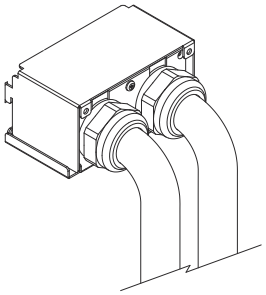

❺

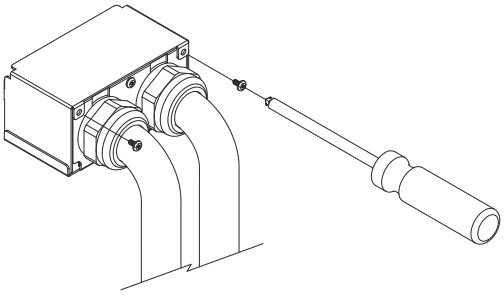

©2020 Cyber Power Systems, Inc. All rights reserved.

ELECTRICAL INSTALLATION CONT.

CONNECT MBP TO UPS INPUT/OUTPUT
CONNECT INTERNAL WIRES THROUGH CONDUITS FOR MBP63AHVHW82U TO UPS

1. Separate the top and bottom covers by Loosening the two screws to separate the top and bottom covers.
   Fix the terminal block bottom cover and tighten the two screws to fix the terminal block bottom cover on the MBP.

2. Insert the output cable through the conduits and connect three wires L, N and Ground to the “FROM UPS OUTPUT” terminal block. (For connection to UPS output).

3. Insert the input cable through the conduits and connect the three wires L, N and Ground to the “UPS NORMAL AC SOURCE” MBP terminal blocks. (For connection to UPS input).

4. Put the terminal block Top cover and tighten the two screws to cover terminal.

5. Tighten the cable glands.

❶

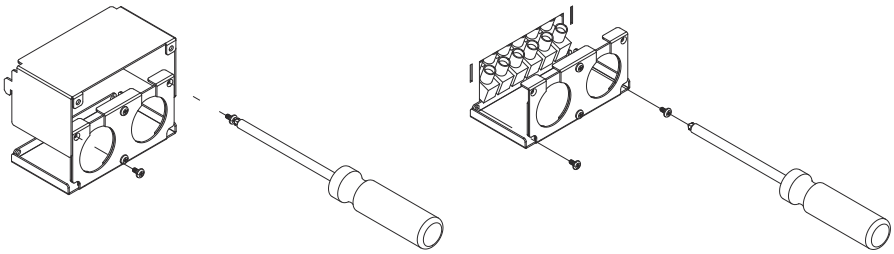

❷ ❸

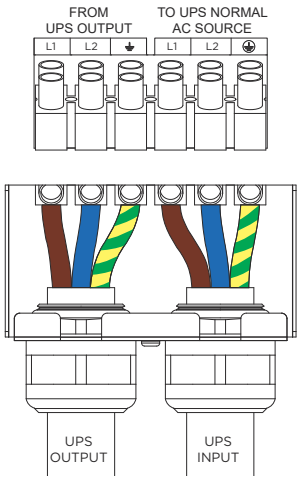

❹

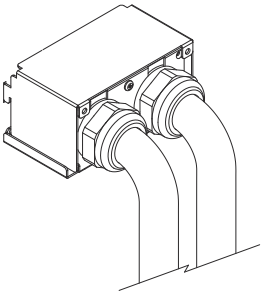

❺

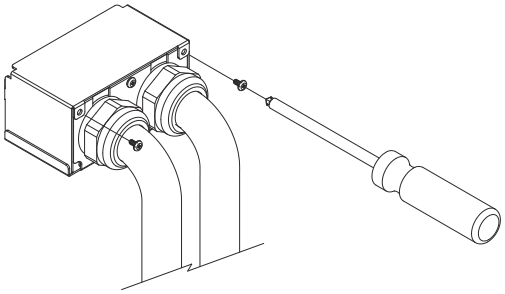

©2020 Cyber Power Systems, Inc. All rights reserved.

ELECTRICAL INSTALLATION CONT.

CONNECTING THE MAINTENANCE BYPASS PDU TO A UPS

Connect the input/output as shown in the following diagrams for different models

OL5KERTHD/OL6KERTHD

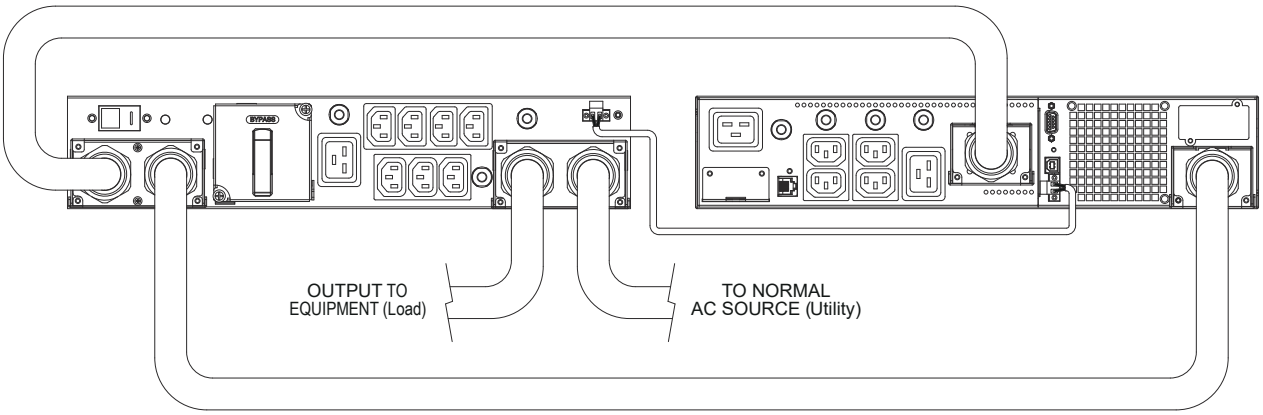

MBP DETECTION CABLE INSTALLATION

Connect the MBP detection cable to the specific UPS connector.

Important ! Only with compatible CyberPower UPS.

After installing the MBP detection cable to the UPS EPO port, the UPS signal input must be set up for Manual Bypass. Refer to the UPS User Manual as following.

(1) OL5KERTHD/OL6KERTHD models :

Set up → communication → Signal input → Manual Bypass → Save Change?

[NOTE] Verify that the total equipment ratings do not exceed the UPS capacity to prevent an overload alarm.

[NOTE] If MBP Detection Cable is installed, the UPS EPO and ROO functions will be disabled.

[NOTE] If MBP Detection Cable is not installed, the UPS will not automatically transfer to bypass mode.

[NOTE] TO AVOID DAMAGE! Follow the correct operation and start up procedures using either the MBP Detection Cable (P9) or Retaining EPO & ROO Function (P15).

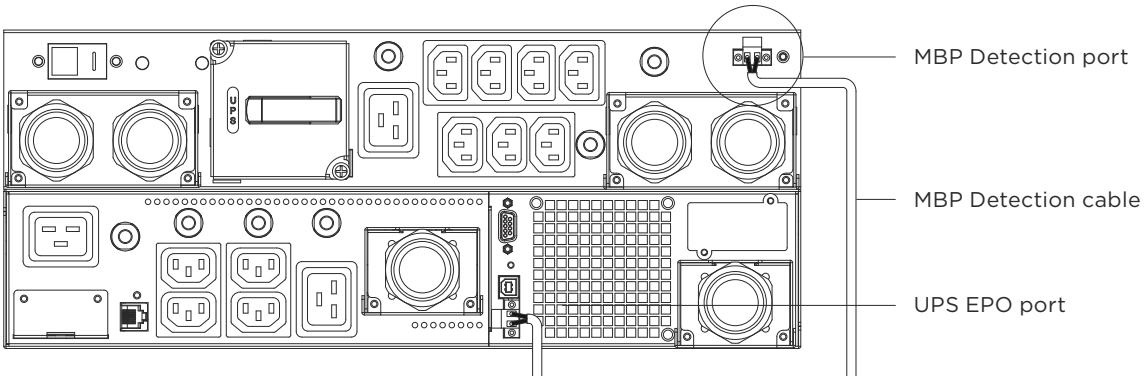

©2020 Cyber Power Systems, Inc. All rights reserved.

ELECTRICAL INSTALLATION CONT.

OPERATIONS WITH MBP DETECTION CABLE INSTALLED

UPS START-UP WITH MBP63AHVHW82U AND MBP DETECTION CABLE

[NOTE] If the UPS is equipped with outlets, those outlets can no longer be used, loads can only be connected to the MBP outlets or the MBP Output terminal blocks. UPS should be turned off when UPS is doing maintenance, if load connect to UPS outlet, the load will be lost.Before turn off UPS, MBP need to set to bypass and keep providing power from utility.

1. Check that the UPS is correctly connected to the MBP63AHVHW82U (see previous chapter HARDWIRING THE INPUT/OUTPUT TERMINAL connecting the input/output and MBP detection) If the UPS is equipped with outlets, those outlets can no longer be used (loads can only be connected to the MBP outlets or the MBP Output terminal blocks).

2. Verify that the MBP terminal blocks are connected to the Normal AC source (Utility).

3. Release two screws by screw driver and open the Cover of MBP switch and Check that the MBP manual Bypass switch is to the **"Bypass"** position.

4. Set the upstream circuit breaker (not provided) to the "I" on position to switch On the Normal AC source (Utility) power.

5. Verify that the **"Bypass"** red light of the MBP goes On, indicating that the load is now powered by the Normal AC source (Utility).

6. Set the UPS INPUT switch of the MBP to the **"I"** on position.

7. Verify that the UPS is correctly powered (UPS display panel illuminates).

❸

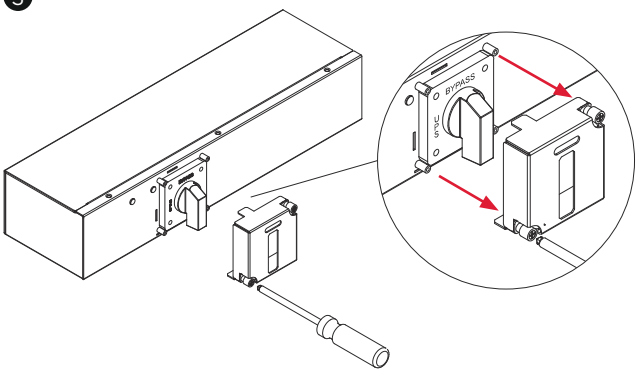

❺

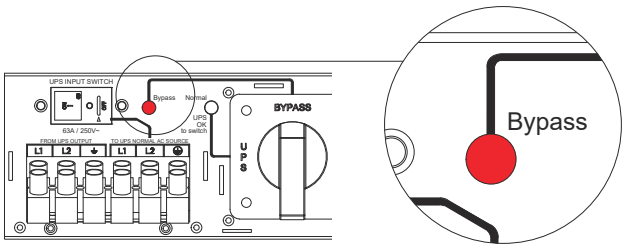

❻

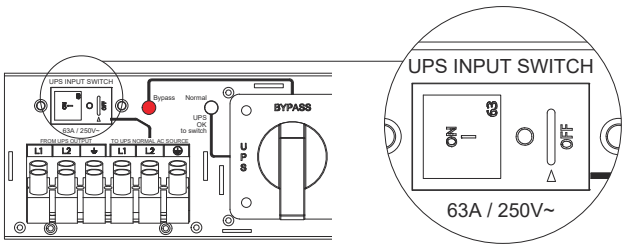

©2020 Cyber Power Systems, Inc. All rights reserved.

ELECTRICAL INSTALLATION CONT.

UPS START-UP WITH MBP63AHVHW82UAND MBP DETECTION CABLE CONT.

8. **Important !** The signal input setting of UPS should set to “Manual Bypass” for MBP detection (refer to the UPS user manual as following)

   OL5KRTHD/OL6KERTHD models :
   Set up → Communication → Signal input → Manual Bypass → Save Change?

   [NOTE] If not follow the step to set the UPS Signal input to Manual Bypass function enable and correctly connected MBP detection cable, it will be caused UPS damage.

9. Press the UPS **“ON/OFF”** power button for 3 seconds to start the UPS.

10. UPS will be automatically turning to **“Bypass mode”** (MBP detection port should connect to UPS EPO port, see previous chapter HARDWIRING THE INPUT / OUTPUT TERMINAL connecting the input /output and MBP detection cable)

11. Verify that the UPS is on Bypass mode by checking UPS display panel (refer to the UPS user manual).

12. Verify that the **“Normal”** green light of the MBP goes On, indicating that the UPS output power is available on the MBP.
    Important ! do not continue to next step if the **“Normal”** green light of the MBP is still Off(the load will be lost).

13. Set the MBP manual Bypass switch to the **“UPS”** position: the load is now powered by the UPS.

14. Replace the Cover of MBP switch and tighten 2 screws by screw driver, UPS will be automatically turning to Line mode.

15. Check that the UPS is in Online mode by checking UPS display panel (refer to the UPS user manual)the load is now protected by the UPS.

⓬

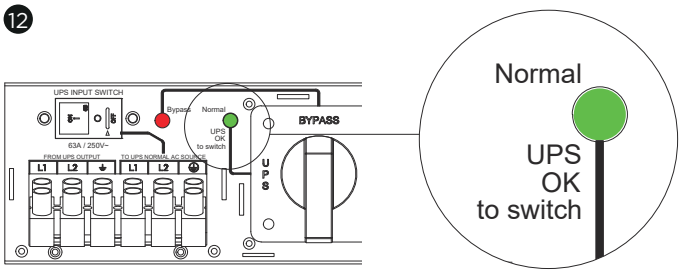

⓭

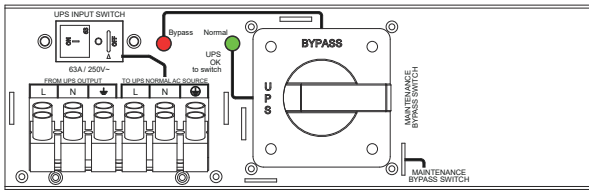

⓮

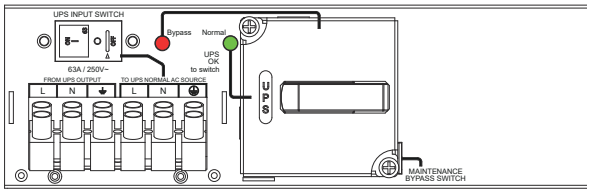

©2020 Cyber Power Systems, Inc. All rights reserved.

ELECTRICAL INSTALLATION CONT.

UPS REPLACEMENT WITH MBP63AHVHW82U AND MBP DETECTION CABLE

For UPS removal, follow the MANDATORY steps below:

1. Release two screws by screw driver and open the Cover of MBP switch, UPS will be automatically turning to **“Bypass mode”**.

2. Verify that the UPS is on Bypass mode by checking UPS display panel (refer to the UPS user manual).

3. Set the MBP manual Bypass switch to **“Bypass”** position, indicating that the load is supplied directly by Normal AC source (Utility) power.

4. Replace the Cover of MBP switch and tighten 2 screws by screw driver.

5. Press the UPS **“ON/OFF”** power button for 3 seconds to turn off UPS and make sure UPS is turned in to standby mode and green light of the MBP goes Off.

❶

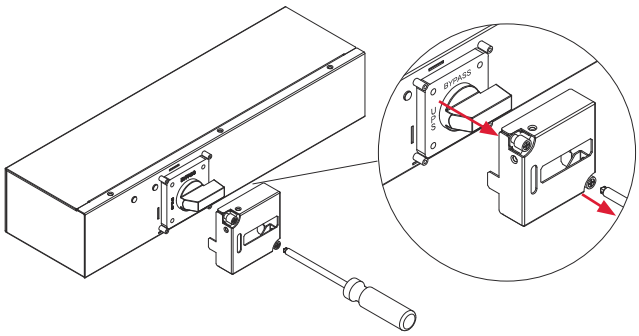

❸

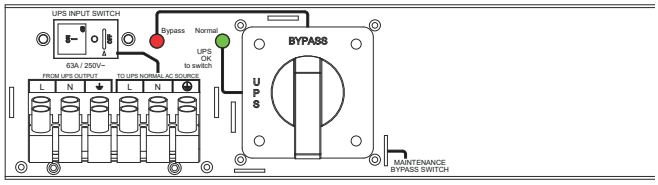

❹

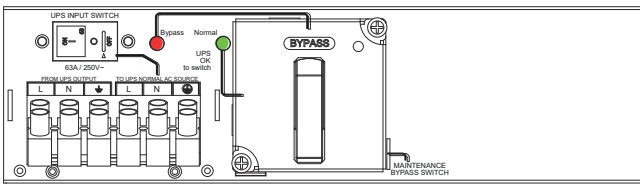

❺

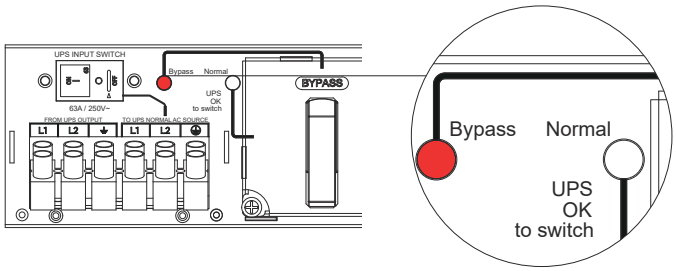

©2020 Cyber Power Systems, Inc. All rights reserved.

ELECTRICAL INSTALLATION CONT.

UPS REPLACEMENT WITH MBP63AHVHW82U AND MBP DETECTION CABLE CONT.

6. Set the UPS INPUT switch of the MBP to the **"O"** off position and wait **90** seconds to make sure UPS is totally shut down.

7. UPS stops, the UPS can now be disconnected, as described below:
   (1) First opening the I/O terminal blocks cover of UPS, check if hazardous voltage is no longer present on UPS terminal blocks by using an electrical safety tester.

   (2) Disconnect the MBP conduits, and the MBP detection cable.

8. Replace the UPS
   ! Hazardous voltage and lost load risk: do not operate the MBP manual Bypass switch without UPS connected to the MBP power conduits.

❻

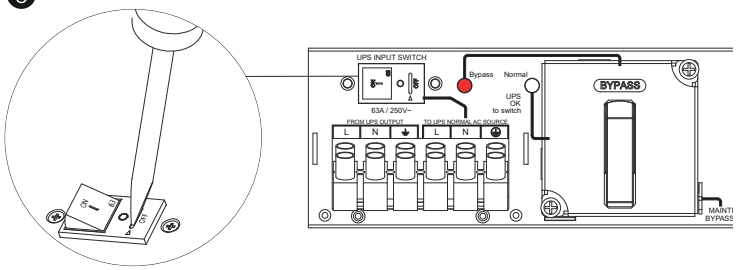

❼

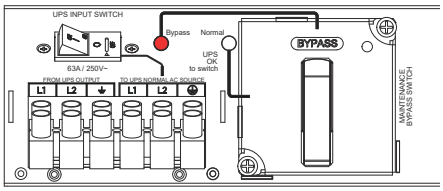

RETURN TO NORMAL OPERATION:

1. Check that the new UPS is correctly connected to the MBP, as described below:
   (1) First check that UPS INPUT switch of the MBP is still locked to the **"O"** off position.

   (2) After opening the UPS I/O terminal blocks cover, connect to UPS the MBP conduits, and the MBP detection cable.
   (see previous chapter HARDWIRING THE INPUT/OUTPUT TERMINAL connecting for more details)

2. Set the UPS INPUT switch of the MBP to the **"I"** on position.

3. Verify that the UPS is correctly powered (UPS display panel illuminates).

4. **Important !** The signal input setting of UPS should set to **"Manual Bypass"** for MBP detection (refer to the UPS user manual as following).

   OL5KERTHD/OL6KERTHD models :
   Set up →communication→Signal input →Manual Bypass →Save Change?

❶

UPS INPUT SWITCH

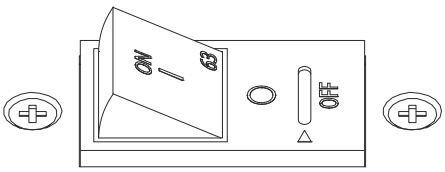

63A / 250V~

©2020 Cyber Power Systems, Inc. All rights reserved.

ELECTRICAL INSTALLATION CONT.

RETURN TO NORMAL OPERATION CONT. :

5. Press the UPS **“ON/OFF”** power button for 3 seconds to turn to start the UPS.

6. UPS will be automatically turning to Bypass mode
   If not, please check MBP detection cable is correctly connected.

7. Verify that the UPS is on Bypass mode by checking UPS display panel (refer to the UPS user manual).

8. Verify that the **“Normal”** green light of the MBP goes On, indicating that the UPS output power is available on the MBP.
   Important ! do not continue to next step if the **“Normal”** green light of the MBP is still Off (the load will be lost).

9. Release two screws by screw driver and open the Cover of MBP switch and the MBP manual Bypass switch is to the **“Bypass”** position now.

10. Set the MBP manual Bypass switch to the **“UPS”** position, indicating that the load is now powered by the UPS.

11. Replace the Cover of MBP switch and tighten 2 screws by screw driver, UPS will be automatically turning to Line mode.

12. Check that the UPS is in Online mode by checking UPS display panel (refer to the UPS user manual) the load is now protected by the UPS.

❾

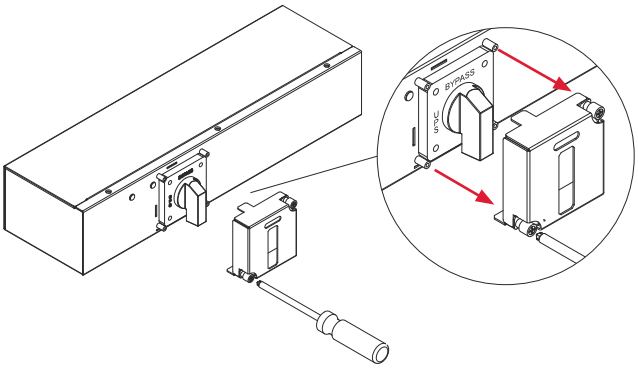

©2020 Cyber Power Systems, Inc. All rights reserved.

OPERATIONS TO RETAIN EPO & ROO FUNCTION (NO MBP DETECTION CABLE)

UPS START-UP WITH MBP63AHVHW82U

[NOTE] Verify that the total equipment ratings do not exceed the UPS capacity to prevent an overload alarm.
[NOTE] If the MBP Detection Cable is not used, the Firmware is not required to be updated.
[NOTE] If MBP Detection Cable is installed, the UPS EPO and ROO functions will be disabled.
[NOTE] If MBP Detection Cable is not installed, the UPS will not automatically transfer to bypass mode
[NOTE] TO AVOID DAMAGE! Follow the correct operation and start up procedures using either the MBP Detection Cable (P9) or Retaining EPO & ROO Function (P15).

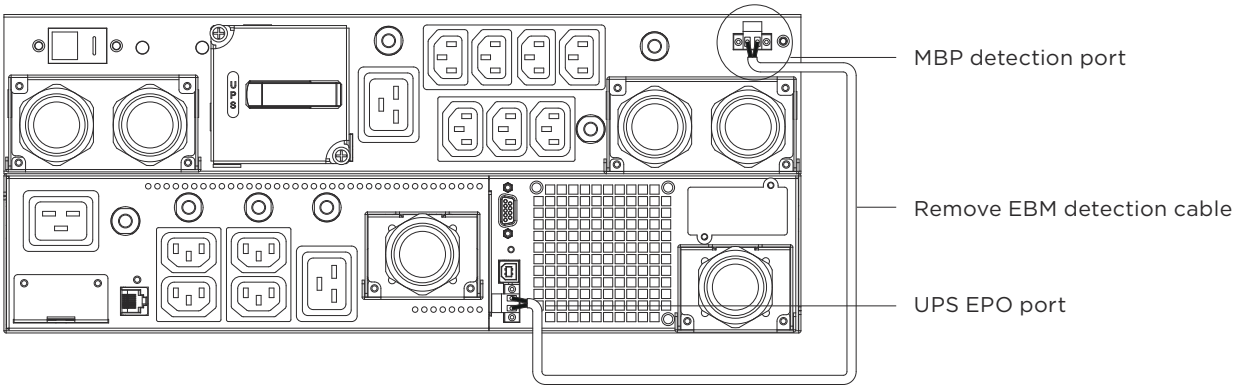

[NOTE] If the UPS is equipped with outlets, those outlets can no longer be used, loads can only be connected to the MBP outlets or the MBP Output terminal blocks. UPS should be turned off when UPS is doing maintenance, if load connect to UPS outlet, the load will be lost.
Before turn off UPS, MBP need to set to bypass and keep provide power from utility.

1. Check that the UPS is correctly connected to the MBP63AHVHW82U
   (see previous chapter HARDWIRING THE INPUT/OUTPUT TERMINAL connecting the input and output but no need to connect MBP detection).

   If the UPS is equipped with outlets, those outlets can no longer be used (loads can only be connected to the MBP outlets or the MBP Output terminal blocks).

2. Verify that the MBP terminal blocks are connected to the Normal AC source (Utility).

©2020 Cyber Power Systems, Inc. All rights reserved.

ELECTRICAL INSTALLATION CONT.

UPS START-UP WITH MBP63AHVHW82U CONT.

3. Release two screws by screw driver and open the Cover of MBP switch and Check that the MBP manual Bypass switch is to the **"Bypass"** position.

4. Set the upstream circuit breaker (not provided) to the **"I"** on position to switch On the Normal AC source (Utility) power.

5. Verify that the **"Bypass"** red light of the MBP goes On, indicating that the load is now powered by the Normal AC source (Utility).

6. Set the UPS INPUT switch of the MBP to the **"I"** on position.

7. Verify that the UPS is correctly powered (UPS display panel illuminates)

8. Enable EPO or ROO function (refer to the UPS user manual as following)
   OL5KERTHD/OL6KERTHD models :
   Set up → communication → Signal input → EPO or ROO → Save Change?

9. Press the UPS **"ON/OFF"** power button for 3 seconds to start the UPS, UPS will be turning to line mode.

10. UPS should set to bypass mode from LCD Panel (refer to the UPS user manual as following)
    OL5KERTHD/OL6KERTHD models :
    Controls → Manual Bypass → Enable → Activate

    Important ! before setting the UPS to bypass mode, do not set the MBP manual Bypass switch to the **"UPS"** position.
    UPS will be damaged if this is not followed.

3

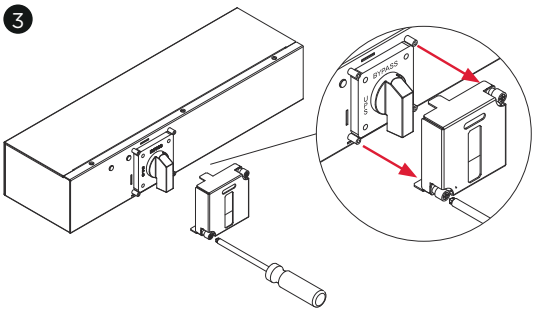

5

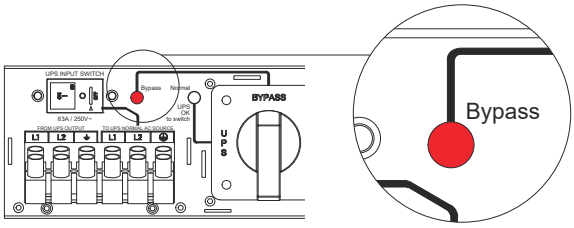

6

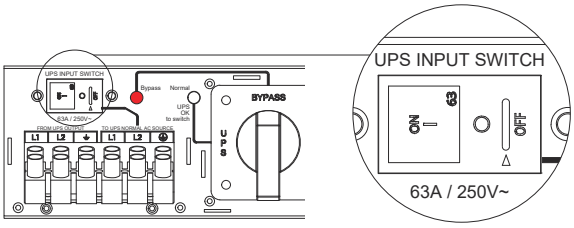

©2020 Cyber Power Systems, Inc. All rights reserved.

ELECTRICAL INSTALLATION CONT.

UPS START-UP WITH MBP63AHVHW82U CONT.

11. Verify that the UPS is on Bypass mode by checking UPS display panel (refer to the UPS user manual).

12. Verify that the **"Normal"** green light of the MBP goes On, indicating that the UPS output power is available on the MBP.

    Important ! do not continue to next step if the **"Normal"** green light of the MBP is still Off (the load will be lost).

13. Set the MBP manual Bypass switch to the **"UPS"** position: the load is now powered by the UPS.

14. Replace the Cover of MBP switch and tighten 2 screws by screw driver, UPS will be automatically turning to Line mode.

15. UPS should set back to line mode from LCD Panel (refer to the UPS user manual as following)
    OL5KERTHD/OL6KERTHD models :
    Controls → Manual Bypass → Disable → Activate

    Important ! After the MBP manual Bypass is switched to the **"UPS"** position, UPS should set back to Line mode to protect load.
    If not, the load is still supplied directly by Normal AC source (Utility) power.

16. Check that the UPS is in Online mode by checking UPS display panel (refer to the UPS user manual) the load is now protected by the UPS.

⓬

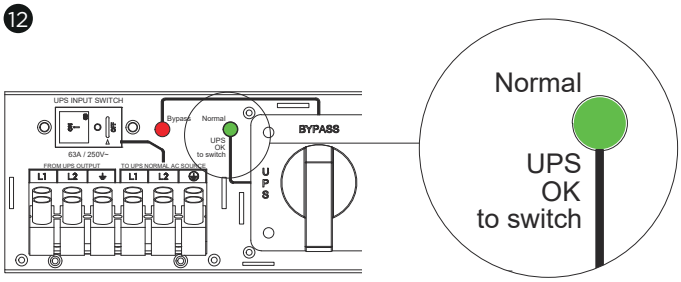

⓭

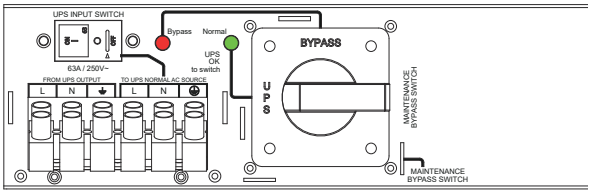

⓮

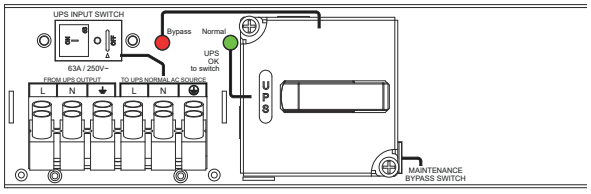

©2020 Cyber Power Systems, Inc. All rights reserved.

ELECTRICAL INSTALLATION CONT.

UPS REPLACEMENT WITH MBP63AHVHW82U

For UPS removal, followed the MANDATORY steps below:

1. Firstly UPS should set to bypass mode from LCD Panel (refer to the UPS user manual as following)
   (1) OL5KERTHD/OL6KERTHD models :
   Controls →Manual Bypass →Enable →Activate

2. Verify that the UPS is on Bypass mode by checking UPS display panel (refer to the UPS user manual)
   Important ! before setting the UPS to bypass mode, do not set the MBP manual Bypass switch to the **"Bypass"** position.
   UPS will be damaged if this is not followed.

3. Release two screws by screw driver and open the Cover of MBP switch.

4. Set the MBP manual Bypass switch to **"Bypass"** position, indicating that the load is supplied directly by Normal AC source (Utility) power.

5. Replace the Cover of MBP switch and tighten 2 screws by screw driver.

6. Press the UPS **"ON/OFF"** power button for 3 seconds to turn off UPS and make sure UPS is turned in to standby mode and green light of the MBP goes Off.

❸

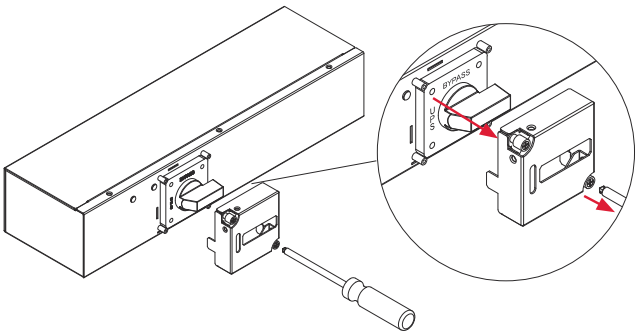

❹

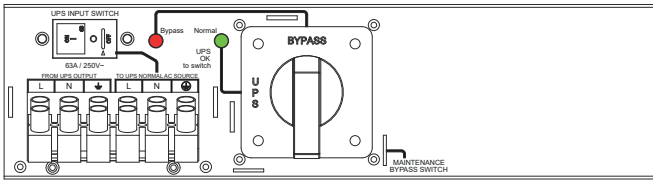

❺

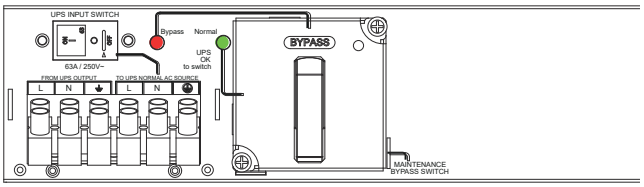

❻

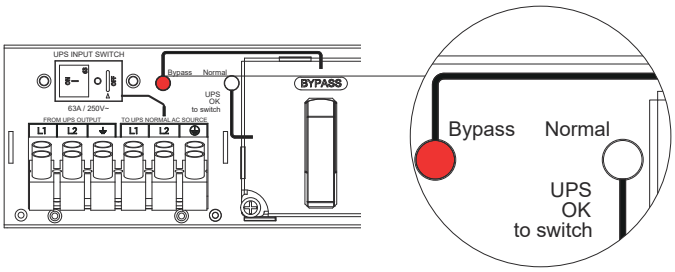

©2020 Cyber Power Systems, Inc. All rights reserved.

ELECTRICAL INSTALLATION CONT.

UPS REPLACEMENT WITH MBP63AHVHW82U CONT.

7. Set the UPS INPUT switch of the MBP to the **"O"** off position and wait **90** seconds to make sure UPS is totally shut down.

8. UPS stops, the UPS can now be disconnected, as described below:
   (1) First opening the I/O terminal blocks cover of UPS, check if hazardous voltage is no longer present on UPS terminal blocks by using an electrical safety tester.
   (2) Disconnect the MBP conduits.

9. Replace the UPS

❼

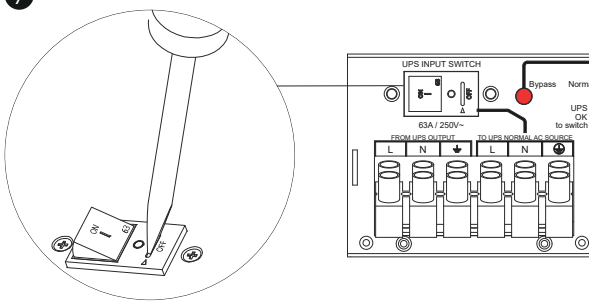

❽

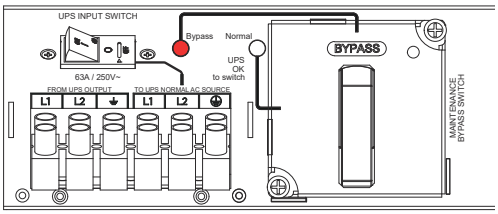

! Hazardous voltage and lost load risk: do not operate the MBP manual Bypass switch without UPS connected to the MBP power conduits.

RETURN TO NORMAL OPERATION:

1. Check that the new UPS is correctly connected to the MBP, as described below:
   (1) Firstly check that UPS INPUT switch of the MBP is still locked to the **"O"** off position.

   (2) After opening the UPS I/O terminal blocks cover, connect to UPS the MBP conduits but no need to connect MBP detection.
   (see previous chapter HARDWIRING THE INPUT/OUTPUT TERMINALS connecting for more details).

2. Set the INPUT switch of the MBP to the **"I"** on position.

3. Verify that the UPS is correctly powered (UPS display panel illuminates)

4. Enable EPO or ROO function (refer to the UPS user manual as following)
   (1) OL5KERTHD/OL6KERTHD models :
   Set up → Communication → Signal input → EPO or ROO → Save Change?

❶

UPS INPUT SWITCH

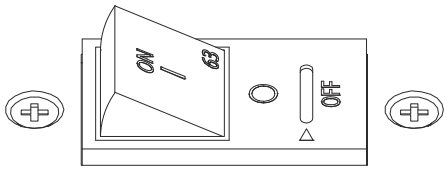

63A / 250V~

©2020 Cyber Power Systems, Inc. All rights reserved.

ELECTRICAL INSTALLATION CONT.

RETURN TO NORMAL OPERATION CONT. :

5. Press the UPS **"ON/OFF"** power button for 3 seconds to start the UPS, UPS will be turning to line mode.

6. UPS should set to bypass mode from LCD Panel (refer to the UPS user manual as following)
   (1) OL5KERTHD/OL6KERTHD models :
   Controls → Manual Bypass → Enable → Activate

   Important ! before setting the UPS to bypass mode, do not set the MBP manual Bypass switch to the **"UPS"** position.
   UPS will be damaged if this is not followed.

7. Verify that the UPS is on Bypass mode by checking UPS display panel (refer to the UPS user manual).

8. Verify that the **"Normal"** green light of the MBP goes On, indicating that the UPS output power is available on the MBP.
   Important ! do not continue to next step if the **"Normal"** green light of the MBP is still Off (the load will be lost).

9. Release two screws by screw driver and open the Cover of MBP switch and the MBP manual Bypass switch is to the **"Bypass"** position now.

10. Set the MBP manual Bypass switch to the **"UPS"** position, indicating that the load is now powered by the UPS.

11. Replace the Cover of MBP switch and tighten 2 screws by screw driver.

12. UPS should set back to line mode from LCD Panel (refer to the UPS user manual as following)
    OL5KERTHD/OL6KERTHD models :
    Controls → Manual Bypass → Disable → Activate

    Important ! After the MBP manual Bypass is switched to the **"UPS"** position, UPS should set back to Line mode to protect load.
    If not, the load is still supplied directly by Normal AC source (Utility) power.

13. Check that the UPS is in Online mode by checking UPS display panel (refer to the UPS user manual) the load is now protected by the UPS.

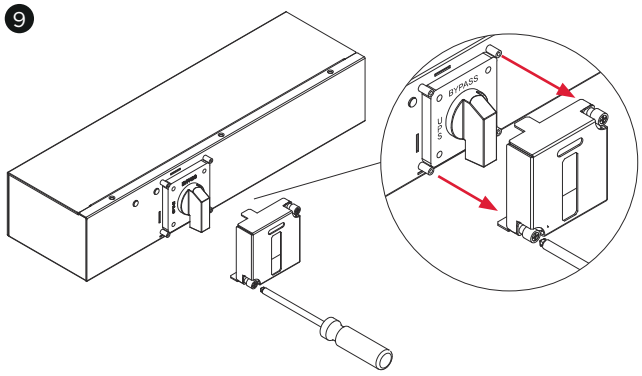

©2020 Cyber Power Systems, Inc. All rights reserved.

TECHNICAL SPECIFICATIONS

MODEL	MBP63AHVHW82U
Input	
Input Voltage Range	200~240V
Input Current Rating	63A
Inlet To Utility Power	(1) Terminal Block
Inlet To UPS Input	(1) Terminal Block
Inlet To UPS Output	(1) Terminal Block
Wiring Information	Use No. 6 AWG, minimum 90°C copper wire and 18 lb-in
Output	
Outlets	(1) IEC C19 (7) IEC C13 (1) Terminal Block
Physical	
Form Factor	2U
Enclosure Construction	Steel
Dimensions (WxHxD) (in.)	17 x 3.4 x 4.9
Dimensions (WxHxD) (mm.)	433 x 86.5 x 125
Weight (lbs.)	8.8
Weight (kg.)	4
TO UPS Cord Length	3ft.
Environmental	
Operating Temperature	32°F to 104°F / 0°C to 40°C
Operating Relative Humidity	0% – 90% non-condensing

©2020 Cyber Power Systems, Inc. All rights reserved.

CyberPower

Cyber Power Systems, Inc. | www.CyberPower.com

Copyright © 2020 Cyber Power Systems, Inc. All rights reserve.